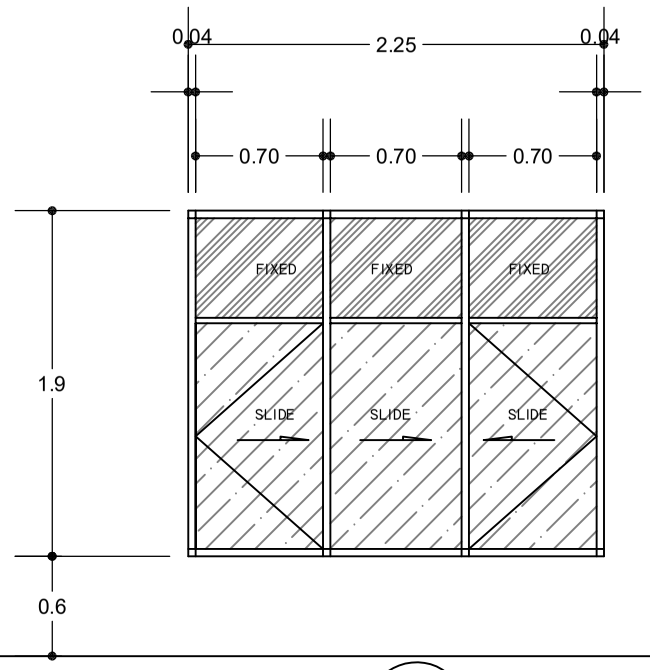

W1

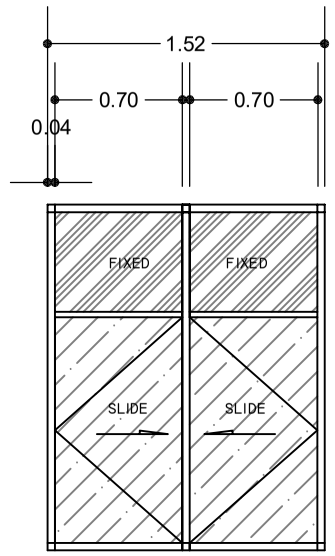

W2

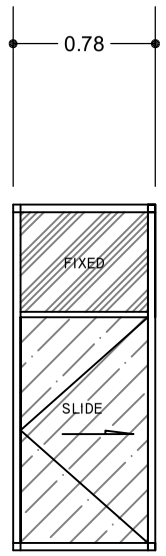

W3

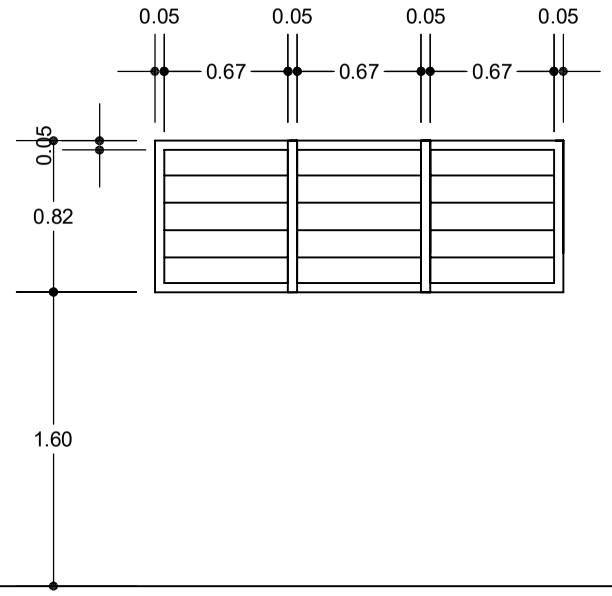

W4

SPECIFICATIONS

WITH ALUMINIUM FRAMES
W1,W2,W3 - GLAZED SLIDING WINDOW

W4
LOUVRE FRAMES - PVC
LOUVRES - CLEAR GLASS
FRAMES 150x50MM H/W

WINDOWS SERIES 1:25

WINDOW/DOOR SHUTTER SPECIFICATIONS
ALUMINIUM ALLOY ROLLER SHUTTER - WHITE
0.7MM THICK
MANUAL AND AUTOMATIC OPEN
CYCLONE RESISTANT

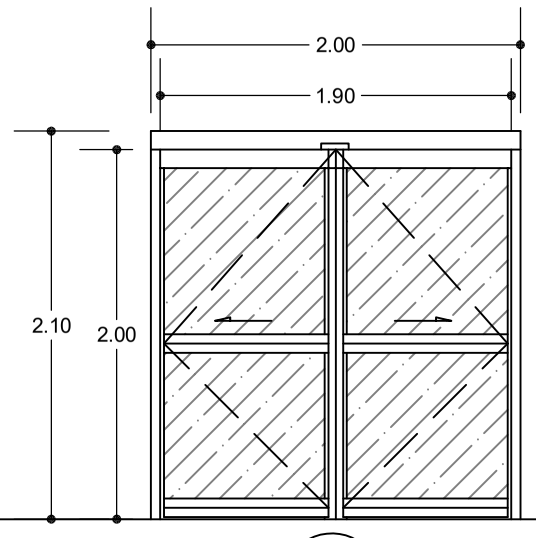

D1

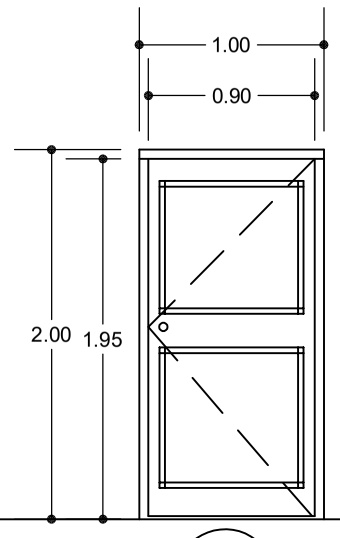

D2

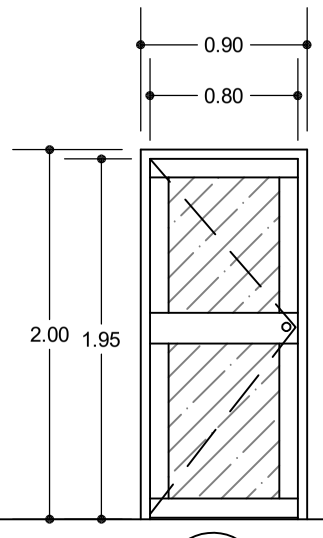

D3

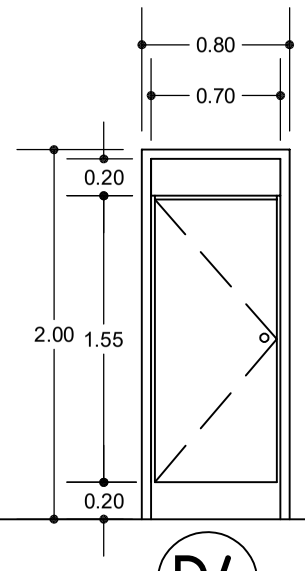

D4

SPECIFICATIONS
D2 - EXTERIOR DOORS
SOLID CORE DOOR - T & G
WITH 150x50MM H/W FRAMES

GLASS DOORS
WITH ALUMINIUM FRAMES
D1 - DOUBLE SWING DOOR
D3 - SINGLE SWING DOOR

TOILET DOOR - D4
WITH ALUMINIUM FRAMES

DOOR SERIES 1:25

DEPARTMENT OF ENVIRONMENT AND CONSERVATION
MINISTRY OF CLIMATE CHANGE

		REVISION	DATE:
DESIGNEDBY:	IAN IERCET		
DRAWNBY:	I IERCET		
CHECKED BY:			
CLIENTNAME:	MoCC - Department of Environment		
DATE:	SEPTEMBER 2023		

NOTES:

PROJECT: ENVIRONMENT DEPARTMENT NEW OFFICE PROJECT

DRAWINGTITLE: DOOR AND WINDOW SCHEDULE

DRAWINGNo: E N V 05

SCALEA3: NTS

PROJECTION: NA.